Nano CH340, R3(Arduino-compatible), schematics

Copyright 2016, actrl.cz
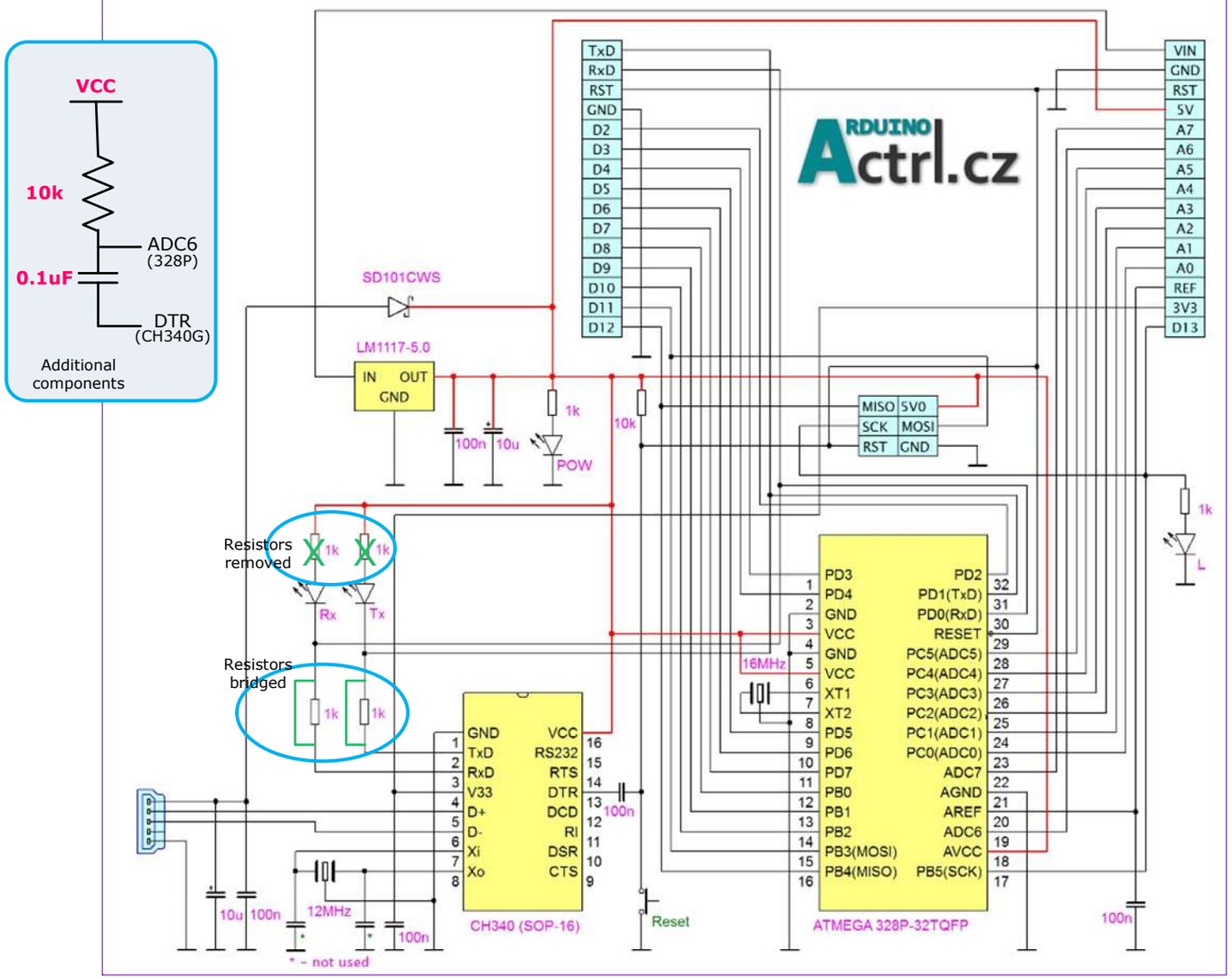
Modified for USBTTL sketch Arduino Forum 6V6GT 11.09.2017